Danze®

SPECIFICATIONS

TWO HANDLE WIDESPREAD LAVATORY FAUCET

Description

- 2 handle with all brass pop-up drain assembly
- Tubular brass spout

Flow & Valving

- See Chart

Standards

- ASME A112.18.1
- CSA B125
- NSF 61-9
- Listed IAPMO/UPC
- Energy policy act of 1992
- ADA Accessibility Guidelines for Buildings and Facilities - 4.27.4 Controls and Mechanisms

Warranty

Danze faucets are covered by a manufacturer's limited "lifetime" warranty for manufacturing defects.

D306457
OPULENCE™

Available Colors & Finish

- Chrome
- Antique Copper (AC)
- Brushed Nickel (BN)
- Satin Black (BS)
- Polished Brass (PBV)
- Polished Nickel (PNV)
- Oil Rub Bronze (RB)

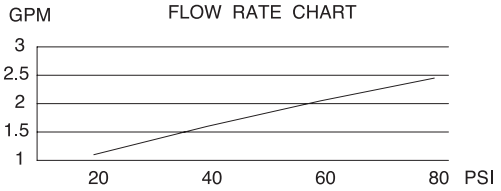

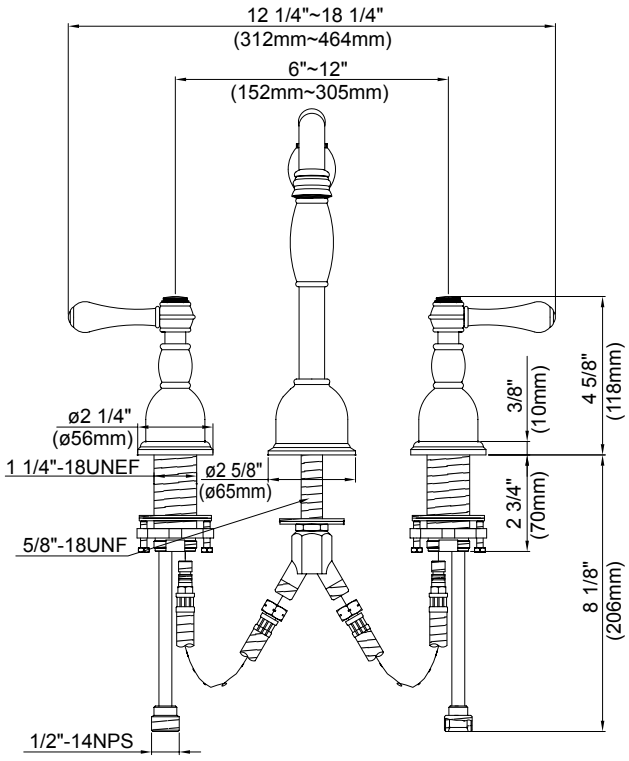

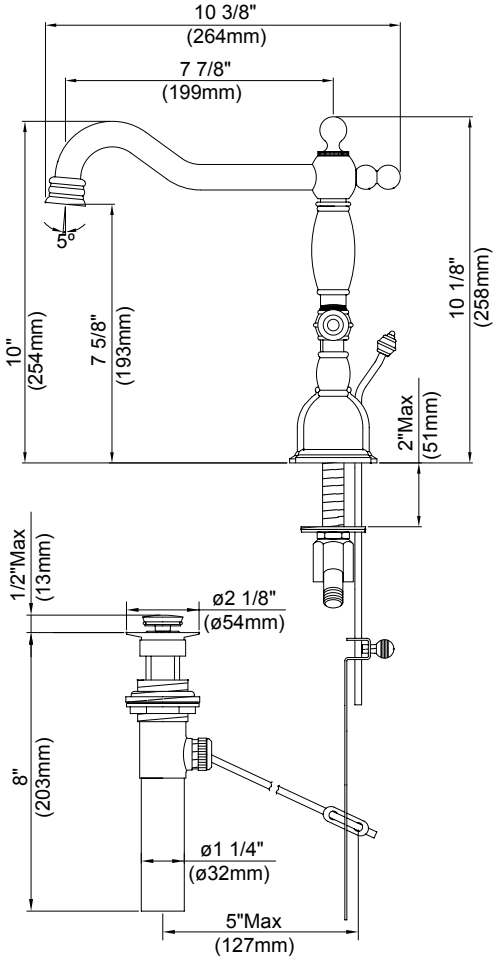

Specific Features: _____ *Submitted Model No.:* _____

SD306457/05-05.01

Danze, Inc., 2 Territorial Court, Suite A, Bolingbrook, IL. 60440, USA